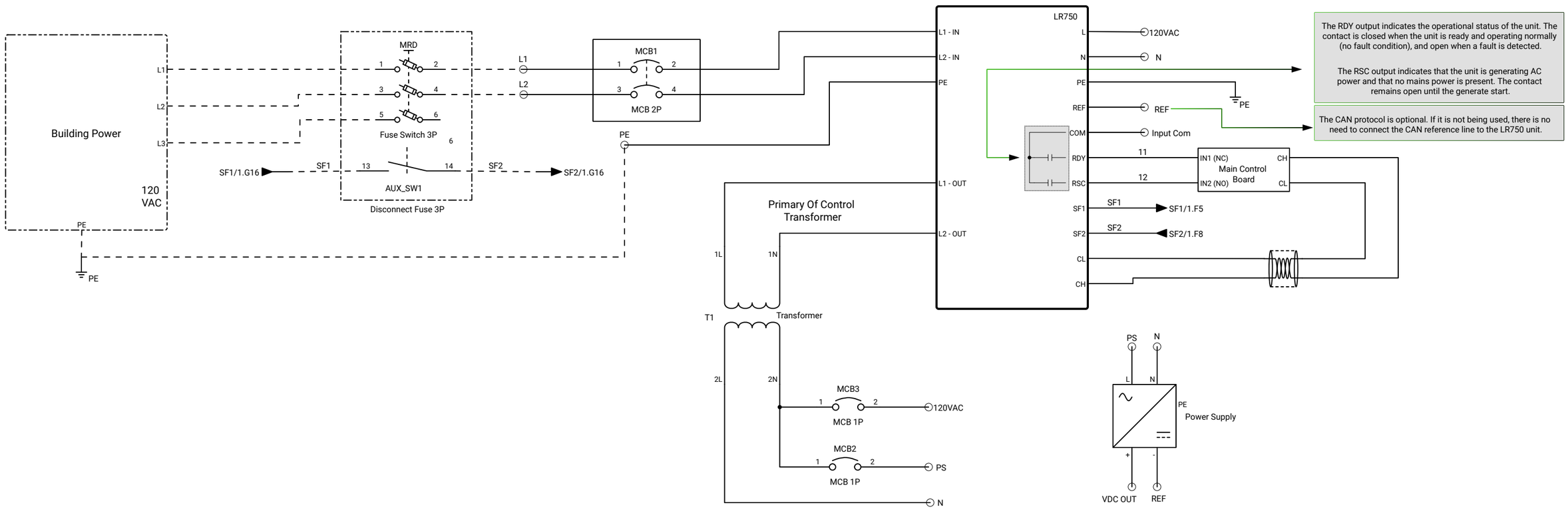

Page Title	LR750 Wiring Diagram	Project	LR750-2(200-240VAC) LR750-4(400-480VAC)	Drawing	V1.25	Drawing No.	V1.25	Edited	01 Sep 2025	Scale	1 : 1
		Client	N/A			Creator	Engineer.1	Created	05 Mar 2024	Page	1 of 1

DYNAVECT